Finals - Sunday, March 27, 2022

SHOTLINK

World Golf Championships-Dell Technologies Match Play

Austin Country Club

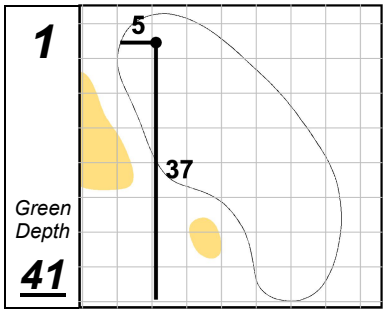

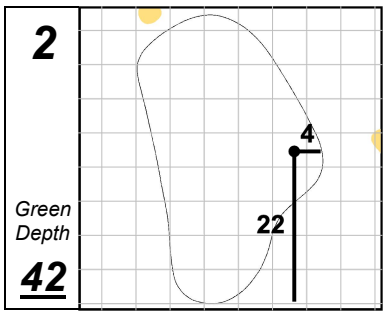

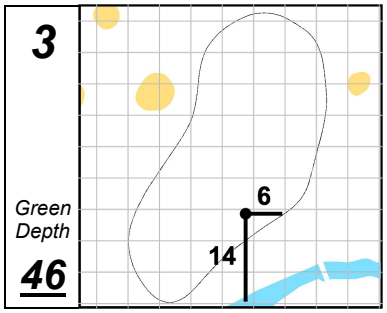

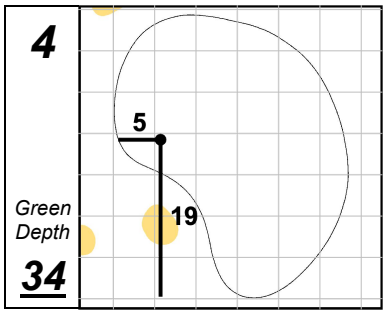

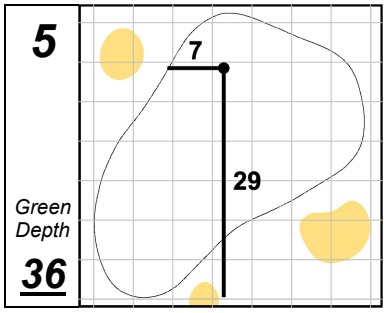

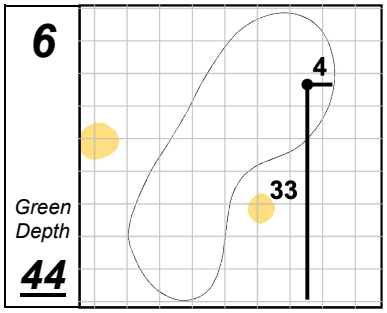

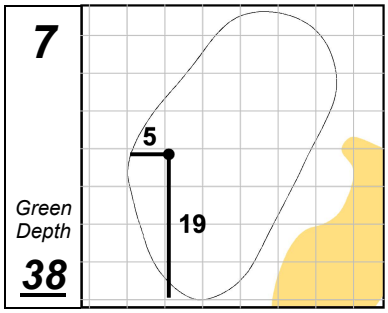

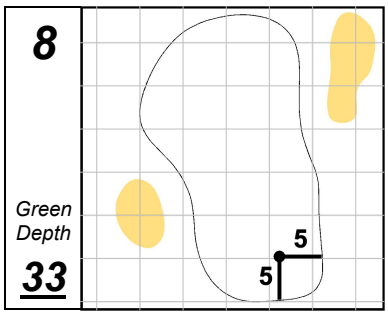

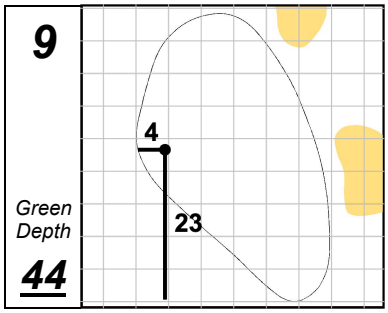

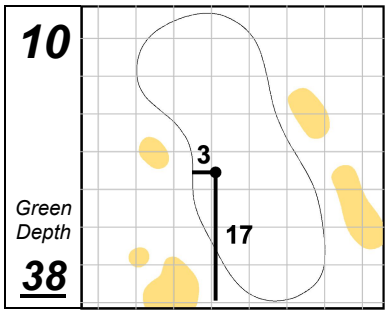

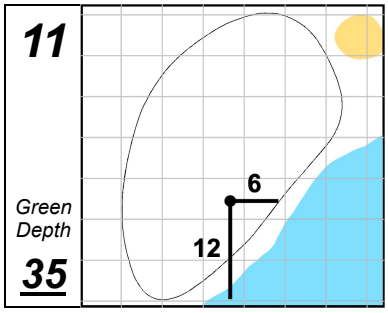

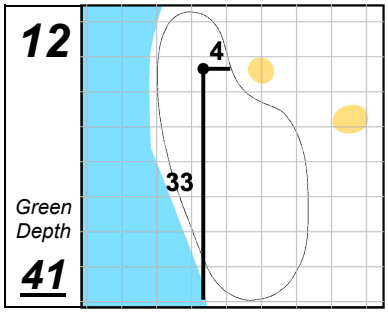

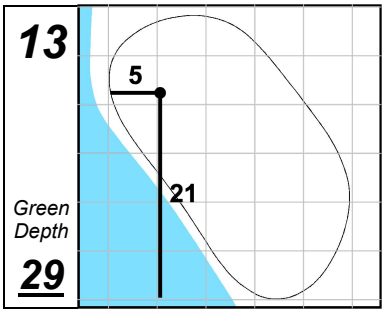

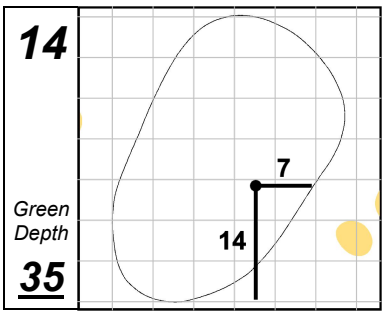

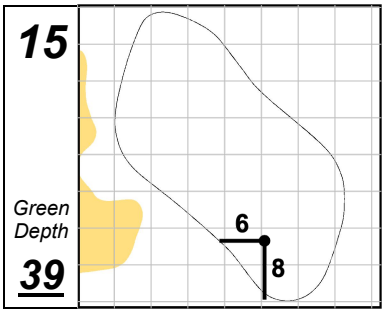

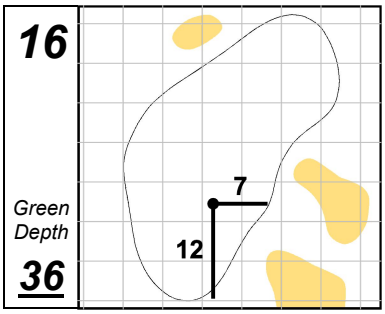

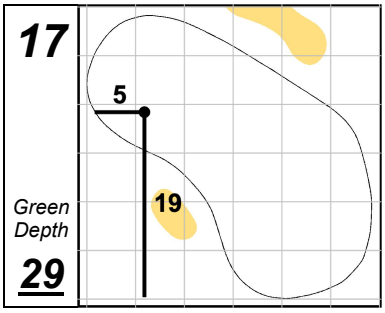

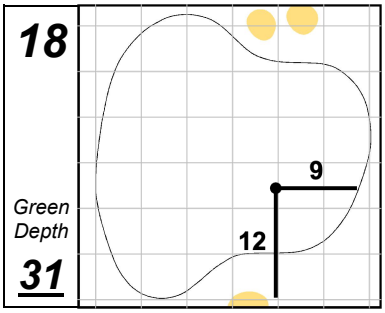

Each side of a complete square on the green represents 5 YARDS.

Sunday, March 27, 2022 10:49:21 AM